Alpha aviation, inc.

1-800-653-5112 Fax 1-952-856-5158

1500 East Main Street
Owatonna, Minnesota 55060

BOX "A" - JACK CYLINDER KIT: MODEL 838HLW / 868HLW

THIS BOX CONTAINS THE FOLLOWING;

1	30.5" Hydraulic Ram	**4**	3/8" x 16 x 1" Bolts
1	3.5" Centering Collar	**3**	3/8" x 16 x 1-1/4" Bolts
3	24" Braces	**9**	3/8" x 16 Nuts
1	1.25" Locking Safety Collar	**8**	3/8" Lock Washers
1	Jack Pump Handle	**1**	7" Pump Handle Storage Pin
1	Hex Key Wrench		

32" Starting Height

Step 1: Mount the Hydraulic Ram to the Base Frame by bolting through the bottom of the frame into the existing hole in the cylinder bottom using a jam nut configuration; one (1) each 3/8 x 16 x 1" bolts, 3/8 x 16 nuts and 3/8 lock washers.

Step 2: Install the Wheel Kit *("F/K" instruction sheet)*

Step 2: Install each of the 24" Braces to the inner holes on the Base Frame with jam nuts using 1" bolts.

Step 3: Slide the 3.5" centering collar over the top of the Hydraulic Ram and attach each of the 24" braces to the centering collar with jam nuts (3) using **1-1/4"** bolts. Finger tighten.

Step 4: Center the Hydraulic Ram inside the centering collar bringing the bolts into firm contact with the cylinder. ***Do not over tighten***

Step 5: Install the jack pump handle storage pin in any open hole using the 7" pump handle storage pin and one (1) each of the 3/8 x 16 nuts and 3/8 lock washers as shown below.

Check All Jam Nuts To Ensure They Are Tight

Please READ and follow the jacking instructions before using.

Copies of the instruction sheets are available on our website: www.alphaaviation.com

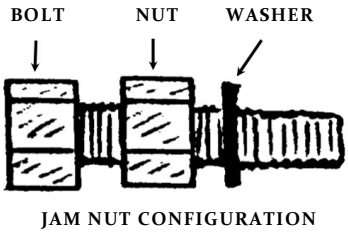

JAM NUT CONFIGURATION

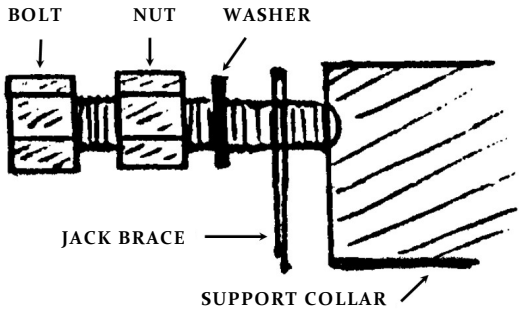

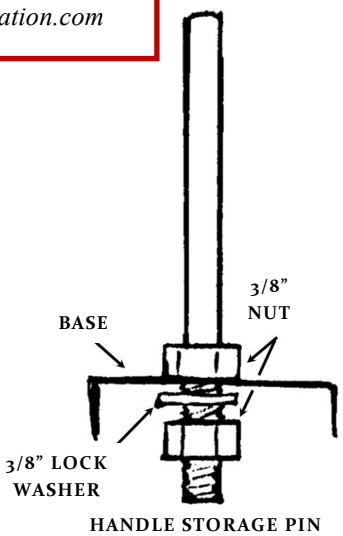

SEE BACK SIDE FOR ADDITIONAL STARTING HEIGHTS

Alpha aviation, inc.
1-800-653-5112 Fax 1-952-856-5158
1500 East Main Street
Owatonna, Minnesota 55060

BOX "A" - MODEL #838HLW / #868HLW

838HLW - Box "G" 6" Welded Riser *(No Instruction Sheet)*
38" Starting Height; Install the 6.25" Welded Riser between the Ram Cylinder and Base Frame using the 7" bolt and 3/8" lock washer provided with Box G and a 3/8" nut.

868HLW
38" starting height; Add the 6" Riser Tube and Riser End Caps. See Box **"H"** Assembly Instructions.
62" starting height; Add the 30" Riser Tube. See Box **"M"** Assembly Instructions.
68" starting height; use both the 6" & 30" risers together. See Box **"M"** Assembly Instructions

838HLW / 868HLW
32" Configuration

868HLW
38" Configuration

838HLW
38" Configuration

868HLW
68" Configuration

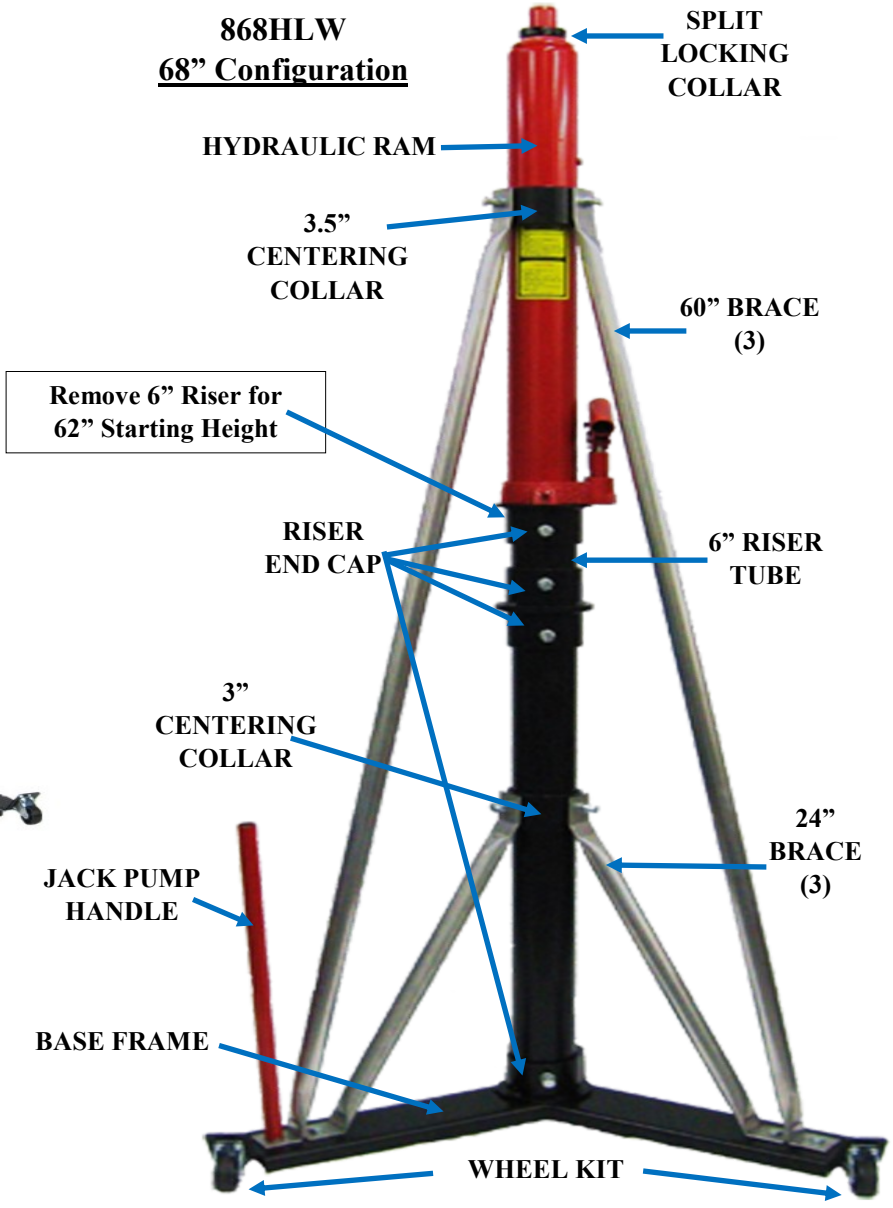

Alpha
aviation, inc.

1-800-653-5112 Fax 1-952-856-5158
1500 East Main Street
Owatonna, Minnesota 55060

BOX "F " (F/K) - BASE FRAME & WHEEL KIT for ALL MODELS

THIS BOX CONTAINS THE FOLLOWING:

1	Base Frame	**2**	3/8 x 16 x 1" Bolts
1	Left Wheel Bracket	**2**	3/8 x 16 Nuts
1	Right Wheel Bracket	**2**	3/8 Lock Washers
2	Wheels	**8**	1/4 x 20 x 3/4" Bolts
		8	1/4 x 20 Lock Nuts

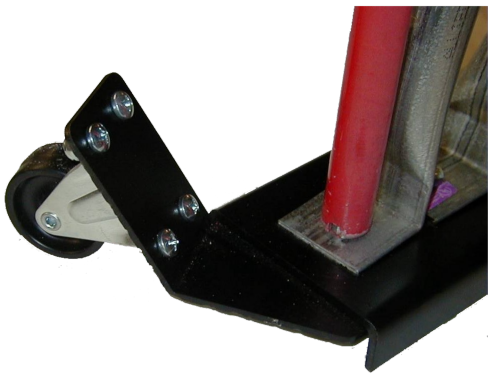

WHEEL INSTALLATION

The wheels are installed on two of the three legs of the jack and are designed to allow the jack to be rolled about as needed.

When installed, these wheels are simply engaged by tilting the jack back onto the wheels and preceding to role the jack to its desired location.

STEP 1: Slide the left mounting bracket into the "C" channel of a leg and secure with the brace mounting bolts or if there is an open hole, by adding a 3/8 x 1" bolt.

STEP 2: Into the leg to the right of the leg chosen for step 1, slide the right mounting bracket into the "C" channel and secure as in step 1.

STEP 3: Install the wheels to the brackets using the ¼" screws and nuts supplied.

STEP 4: Complete the jack assembly per the instructions supplied with the hydraulic cylinder.

Alpha
aviation, inc.
1-800-653-5112 Fax 1-952-856-5158
1500 East Main Street
Owatonna, Minnesota 55060

BOX "H" - MODEL 368W / 868W / 868HLW RISER TUBES & END CAPS

THIS KIT CONTAINS THE FOLLOWING:	
Single Pack	**Double Pack**
1 6" Riser Tube	**2** 6" Riser Tubes
2 Riser Tube End Caps	**4** Riser Tube End Caps
4 3/8" x 16 x 1" Bolts	**8** 3/8" x 16 x 1" Bolts
4 3/8" x 16 Nuts	**8** 3/8" x 16 Nuts
4 3/8" Lock Washers	**8** 3/8" Lock Washers

ASSEMBLY

Step 1: Mount the hydraulic ram to one of the riser caps by bolting through the cap into the existing hole in the cylinder bottom using the jam nut configuration as shown below; one (1) each of the 3/8 x 16 x 1" bolts, 3/8 x 16 nuts and 3/8 lock washers.

Step 2: Mount the triangular base to one of the base riser caps by bolting through the riser cap and frame using the jam nut configuration.

Step 3: Install the 6" riser tube in the riser cap attached to the frame. Using the jam nut configuration, tighten to secure the riser tube in place.

Step 4: Install the hydraulic ram, with riser cap attached, to the top of the riser tube securing it to the riser with the jam nut configuration.

Step 5: Complete the jack assembly per the instructions supplied with other jack components.

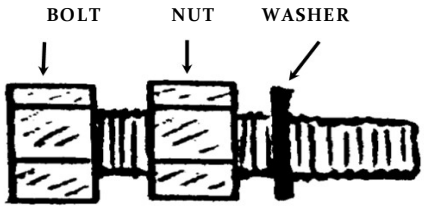

JAM NUT CONFIGURATION

Alpha
aviation, inc.

1-800-653-5112 Fax 1-952-856-5158
1500 East Main Street
Owatonna, Minnesota 55060

BOX "M" - MODEL 868HLW LONG RISER & BRACES KIT

THIS KIT CONTAINS THE FOLLOWING:

1	30" Riser Tube	**7**	3/8" x 16 x 1" Bolts
1	3" Centering Collar	**7**	3/8" x 16 Nuts
3	60" Braces	**7**	3/8" Lock Washers
2	Riser Tube End Caps		

62" Starting Height

Step 1: Mount one of the Riser End Caps to the bottom of the Hydraulic Ram by bolting through the end cap into the existing hole in the bottom of the ram cylinder using the jam nut configuration shown below; one (1) each 3/8" x 16 x 1" bolt, 3/8" x 16 nut and 3/8" lock washer. Set aside.

Step 2: Mount the remaining Riser End Cap to the Base Frame using a jam nut (1).

Step 3: Install the Wheel Kit. *("F/K" instruction sheet)*

Step 4: Install each of the 24" braces to the inner set of holes on the base frame using jam nuts (3).

Step 5: Place the 30" Riser Tube into the Riser End Cap mounted onto the Base Frame, securing it with jam nuts (3)

Step 6: Slide the 3" Centering Collar over the 30" riser tube. Attach each of the 24" braces with jam nuts (3), making sure the riser tube stays centered inside the centering collar. Tighten the jam nuts, brace to collar, securing the braces firmly.

Step 7: Place the Hydraulic Ram with Riser End Cap on top of the 30" riser and secure it using jam nuts(3).

Step 8: Slide the 3.5" Centering Collar over the Hydraulic Ram.

Step 9: Install each of the 60" Braces to the outer set of holes on the Base Frame using jam nuts (3).

Step 10: Slide the 3.5" Centering Collar over the Hydraulic Ram. Attach each of the 60" Braces using jam nuts, making sure the collar is centered around the cylinder. Tighten the jam nuts, brace to collar, securing the braces firmly. ***Do not over tighten***

Step 11: Put the locking collar on the piston.

Check all jam nuts to ensure they are all tight.

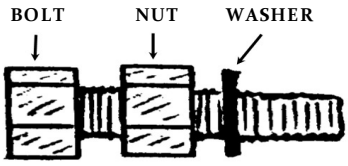

JAM NUT CONFIGURATION

Please READ and follow the Jacking Instructions before using.

Copies of the instruction sheets are available on our website: www.alphaaviation.com

SEE BACK SIDE FOR ADDITIONAL STARTING HEIGHTS

Alpha aviation, inc.

1-800-653-5112 Fax 1-952-856-5158

1500 East Main Street
Owatonna, Minnesota 55060

BOX "M" - Cont'd

68" STARTING HEIGHT

Step 1: Mount one of the Riser End Caps to the bottom of the Ram Cylinder by bolting through the end cap into the existing hole in the bottom of the cylinder using the jam nut configuration shown below; one (1) each 3/8" x 16 x 1" bolt, 3/8" x 16 nut and 3/8" lock washer.
Set aside.

Step 2: Take 2 of the riser end caps, place them back to back and join them with a jam nut (1).
Set Aside.

Step 3: Mount the remaining Riser End Cap to the Base Frame using a jam nut (1).

Step 4: Install the wheel kit. *("F/K" instruction sheet)*

Step 5: Insert the 30" Riser Tube into the Riser End Cap mounted to the Base Frame. Secure with jam nuts (3).

Step 6: Install the 24" braces (3) to the inner set of holes on the Brace Frame using jam nuts (3).

Step 7: Slide the 3" Centering Collar over the 30" Riser Tube. Mount the 24" Braces to it using jam nuts (3).

Step 8: Place the 2 Riser End Caps that are connected on top of the 30" Riser Tube. Secure with jam nuts (3).

Step 9: Insert the 6" Riser Tube into the Riser End Cap. Secure with jam nuts (3).

Step 10: Place the Ram Cylinder with Riser End Cap onto the 6" Riser Tube. Secure with jam nuts (3).

Step 11: Install each of the 60" Braces to the outer set of holes on the Base Frame using jam nuts (3).

Step 12: Slide the 3.5" Centering collar over the Ram Cylinder. Attach each of the 60" Braces using jam nuts. Make sure the collar is centered around the cylinder. Tighten the jam nuts, brace to collar, securing the braces firmly. ***Do not over tighten***

Step 13: Put the locking collar on the piston.

Check all jam nuts to ensure they are all tight.

Please READ and follow the jacking instructions before using.

Copies of the instruction sheets are available on our website: www.alphaaviation.com

32" starting Height - Ram Cylinder, Base Frame, 24" Braces (3)
Refer to the Box "A" & "F/K"

38" Starting Height - Ram Cylinder, Base Frame, 24" Braces (3), 6" Riser Tube, Riser End Caps (2)
Refer to the Box "A", "F/K" and "H"

Alpha
aviation, inc.

1-800-653-5112 Fax 1-952-856-5158
1500 East Main Street
Owatonna, Minnesota 55060

JACKING INSTRUCTIONS

CAUTION:

Jacking of aircraft and working around or under jacked aircraft are hazardous work operations and should only be attempted by experienced personnel.

IF IN DOUBT, SEEK EXPERIENCED INDIVIDUALS TO HELP YOU

RAISING:

Always jack on a level surface.

Center the jack under the aircraft jack point.

When all required jacks are in place, jack the aircraft evenly, using multiple personnel or moving from jack to jack, as needed, to maintain a relatively level attitude.

When the aircraft is at the desired height, engage the safety collars using the following method:

Lower the safety collar into a position 1/8" above the cylinder and tighten securely.

Slowly release the pressure in the ram. Lower the load onto the collar, to determine if the collar is tight enough to support the load.

If the load is held; pump the jack handle enough to restore pressure to the ram - taking the load off of the safety collar.

If the load slips at all; raise the load off of the safety collar, retighten and re-test as above.

LOWERING:

Pump the jack handle to raise the load off of the safety collar.

Loosen the safety collar bolts, to allow the collar to slide up the ram as it is lowered.

Slowly lower the aircraft, evenly, using multiple personnel or moving from jack to jack, as needed, to maintain a relatively level attitude.

Safely slide the jacks from under the aircraft.

Alpha
aviation, inc.

1-800-653-5112 Fax 1-952-856-5158

1500 East Main Street
Owatonna, Minnesota 55060

PRODUCT WARRANTY

Each aircraft jack and tail weight produced and sold by Alpha Aviation Inc. (AAI) is unconditionally warranted against defects in material and workmanship for a period of one year, from the date of purchase.

Items which are found to be defective will be either repaired or replaced at the discretion of Alpha Aviation Inc.

All items returned to AAI for any reason should be shipped freight prepaid. All items repaired or replaced will be returned to the customer by AAI, freight pre-paid.

SATISFACTION GUARANTEE

Alpha Aviation Inc. is dedicated to producing products, which meet or exceed the customer's expectations. Therefore, each and every product is sold on a 30-day satisfaction guaranteed basis. Should a product not meet the customer's expectation or application, a full refund of the purchase price will be made upon the return of the product in resalable condition.

All products returned under the terms of this satisfaction guarantee must be returned freight pre-paid.

ACKNOWLEDGEMENTS AND DISCLAIMERS

DANGEROUS ACTIVITY ACKNOWLEDGEMENT

THE PURCHASER ACKNOWLEDGES THAT HE OR SHE IS AWARE THAT ACTIVITIES THAT INVOLVE THE JACKING, RAISING OR SUPPORTING OF AIRCRAFT ARE INHERENTLY DANGEROUS ACTIVITIES, AND THAT SUCH ACTIVITIES CAN RESULT IN PROPERTY DAMAGE, PERSONAL INJURY AND DEATH.

DAMAGE AND INJURY DISCLAIMER

Alpha Aviation Inc. disclaims responsibility for any and all injuries or damage, which may result from the use of its products. This disclaimer includes damages and injuries that are either a direct result or consequential to the use of the product.

PRODUCT APPLICATION ACKNOWLEDGEMENT

The purchaser acknowledges that; the products provided by Alpha Aviation Inc. are furnished with no warranty as to application or suitability for any specific purpose.

The purchaser further acknowledges that; Alpha Aviation Inc listing of applications is offered as a guide and the final decision as to the suitability of any product for a specific task is the sole responsibility of the user.

The purchaser further acknowledges; that Alpha Aviation Inc. has no control over the products location, use or the expertise of the person using the product.

Alpha
aviation, inc.

1-800-653-5112 Fax 1-952-856-5158
1500 East Main Street
Owatonna, Minnesota 55060

SUGGESTED JACK TESTING and REFILL PROCEDURES

CHECKING OIL LEVEL

The easiest method is to simply pump the unloaded jack to its maximum length.

If the jack reservoir contains **adequate** oil it will reach its full extended length and the jack handle will become difficult to pump as you will feel the oil bypassing.

If the jack reservoir contains **inadequate** oil it will not reach its full extended length and the jack handle will be less difficult to pump and the ram will not advance upward.

ADDING HYDRAULIC JACK OIL

Stand the jack on its base and carefully remove the rubber drain plug by twisting as you work it out from the side of the jack body.

Place the jack on its side with the fill hole up and add oil using a small funnel.
An ounce of oil will gain you about an inch of lift – do not over fill – As you add oil periodically stand the jack up and pump it to determine if it has adequate oil to reach full extension.

If the jack reservoir contains **adequate** oil it will reach its full extended length and the jack handle will become difficult to pump as you will feel the oil bypassing.

When filled, carefully reinstall the plug. Place the plug at a slight angle to the hole and assist the bulbous end into the hole using a small flat blade screw driver. Once it is started twist and push the plug until it is seated against the jack housing.

HOW MUCH OIL WILL I NEED & WHAT OIL SHOULD I USE?

From empty, depending on the model, each jack will take between 1 and 2 quarts of commercially available hydraulic jack oil (10W). If a commercial product is unavailable 10W Mineral Oil or 10W non-detergent motor oil can be substituted.

MY JACK ONLY RISES ON ONE STROKE - NOT BOTH

That is a common problem when a new jack is placed into service. Long ram jacks are designed to be used in the vertical but by necessity are shipped in the horizontal.

What has happened is that air has entered the hydraulic chamber and an air lock has occurred. To clear the air lock, pump the jack up about 12”, open the valve and physically push the Ram down, you should hear a burp. Retest.

If the problem has not cleared, next place the jack on the floor, open the valve and manually pull the Ram up out of the cylinder to its full extension. This will pull oil from the reservoir through both pump chambers and into the ram chamber.

At this point, manually push the Ram down to the bottom of its stroke – listen for air (Burp) toward the end of the stroke. Retest.

If the problem has not cleared please call for assistance, repair or replacement.

Alpha
aviation, inc.
1-800-653-5112 Fax 1-952-856-5158
1500 East Main Street
Owatonna, Minnesota 55060

RESEAL PROCEDURES

LEAKING PUMP PISTON SHAFT

Do not drain jack oil.

Place the jack on its side with the pistons up and the valve chamber elevated to drain the oil from the valve section into the reservoir.

Remove the rocker assembly pins as necessary to gain access to the piston shaft and remove the leaking piston.

Replace the seal or seals as appropriate and carefully reinstall the piston.

Note – when reinstalling a Double Seal assembly, if the cup is difficult to reinsert it is advisable to remove the pump housing from the valve body, remove any paint and/or burrs from the piston shaft and reinsert the piston from the bottom to avoid damaging the new seal.

Reassemble the rocker assembly and preform an operational test.

LEAKING or WORN CONTROL VALVE SEAL

Do not drain the jack oil.

Place jack on its back with the control valve up and the valve chamber elevated to drain the oil from the valve section into the reservoir. Remove the control valve pin and viewing through the hole you will see the seal.

With a small screw driver or pick push the seal in enough to roll it sideways and pick it out. Remove the check ball and clean the chamber with spray carb or brake cleaner; reinstall the check ball.

Install the new seal using a small Philips screw driver or rod as a guide. Do not push it all the way in; it can block the oil return path. Stop 6 or 7 threads down as the Control Pin will force it into position.

Clean and lubricate the control pin and reinstall. and test.

WORN RAM SEALS, LEAKING TOP GLAND or HOUSING

Drain the Oil

Caution – The bottom housing seal and the Ram vinyl Support Seal are directional.

Stand the jack on its base and carefully remove the rubber drain plug by twisting as you work it out from the side of the jack body.

Place the jack on its side over a bucket and drain.

Lock the Valve Body in a large vice and remove the top Gland.

Slide out the Gland and Ram as an assembly.

Remove paint from Ram and deburr prior to reassembly

Remove the outer Housing, the Ram Cylinder tube can remain attached to the Valve Body.

Replace -

- Ram, Lower “O” Ring and vinyl Support.
- Valve Body to Housing base seal
- Top Gland to Ram interior “O” Ring
- Top Gland to Housing vinyl seal.
- Reassemble - Refill and test.